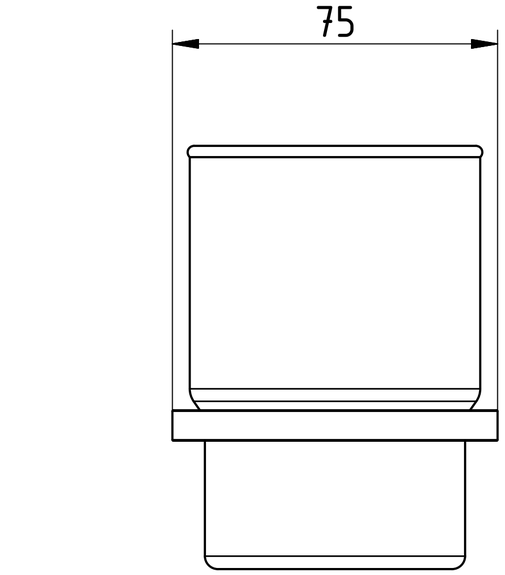

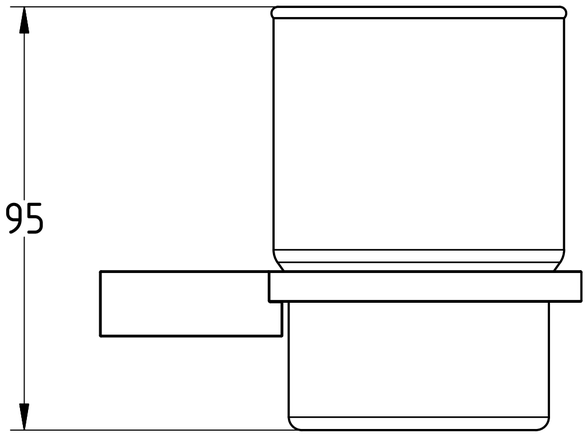

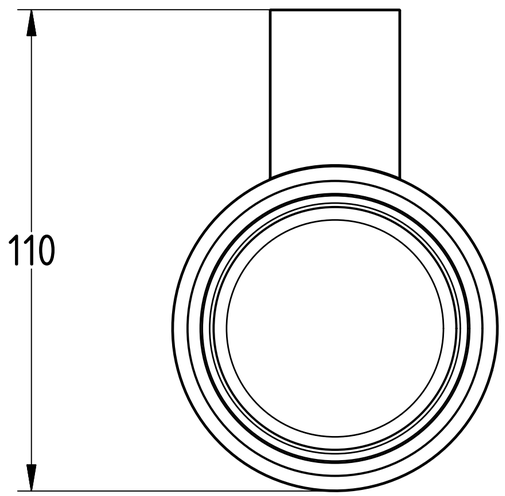

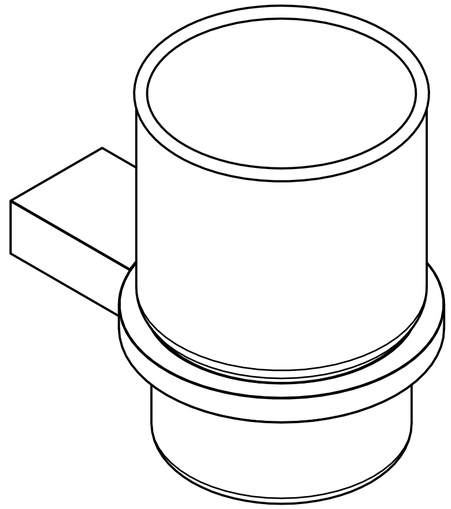

VIOLEK					
				Date	Name
			Drawn		
			Checked		
			Standard		
			Weight: 0,165 kg		
State	Changes	Date	Name		

GLAMOUR
TUMBLER HOLDER

1
A2